SR-90

ROCKER SWITCH
SR-90 SERIES

SR-90A

SR-90N

SR-90N

SPECIFICATIONS

CQC, EK05, KEMA KEUR	6(2)A	250VAC	T125/55	5E4
	10(3)A	250VAC	T125/55	
UL c UL E199326	10.1A	250VAC	T125	
	16A	125VAC		

FEATURES

- Usage: Coffee machine
  用途：咖啡機
- Single Pole
  單極
- With Indicator lamp option
  指示燈功能

- Temperature Rating: -10°C~125°C
  額定溫度：-10℃~125℃
- Flammability Rating: UL94V-2 / Optional UL94V-0
  可燃性等級：UL94V-2 / 可選 UL94V-0

ORDER INFORMATION

A H T BK BK 3 0 0 00 0

FUNCTION
- A ON-OFF
- N ON-OFF w/lamp (Unswitched neutral)

CURRENT
- H 10(3)A 250VAC
- 6(2)A 250VAC 5E4
- 16A 125VAC
- L 10(3)A 250VAC
- 16A 125VAC

TERMINAL TYPE
- T

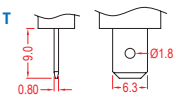

BASE COLOR
- BK Black

BUTTON COLOR
- BK Black
- WT White
- GE Grey
- RE Red
- GR Green
- BL Blue
- OR Amber

BUTTON TYPE
- 3

PRINTING
- 0 NONE
- 1
- 2
- 3
- 8 ON OFF
- 9 OFF ON
- A

COLOR OF PRINTING
- 0 None
- 1 White
- 2 Black
- 3 Red
- 4 Blue
- 5 Yellow

SMALL LEN COLOR
- 00 None
- RE Red
- GR Green
- BL Blue
- OR Amber

LAMP VOLTAGE
- 0 None
- 1 12V
- 3 110V
- 4 220V

INTERNAL USE ONLY

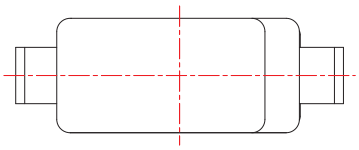

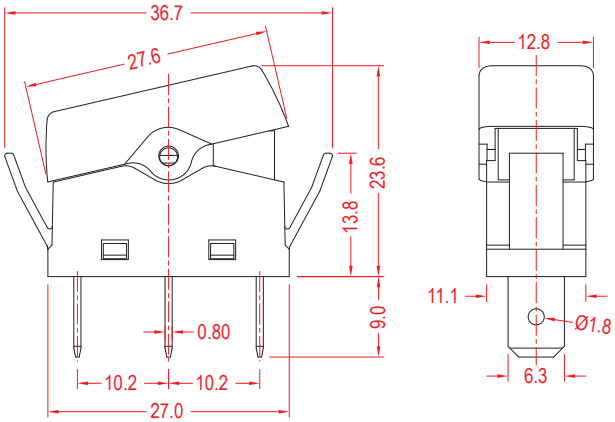
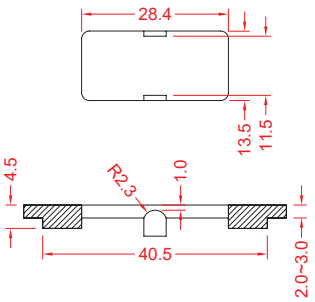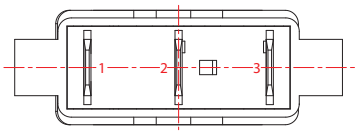
SUGGESTED PANEL HOLE SIZE