ROCKER SWITCH

SR-32 SERIES

SR-32A

SR-32I

SR-32N

SR-32N

SR-32 CAP

SPECIFICATIONS

CQC, CE 05, KEMA KEUR, K	10(3)A	250VAC	T125/55	5E4
	16(4)A	250VAC	T125/55	
	10(8)A	250VAC	T125/55	
UL c UL E199326 E250803	10.1A	250VAC	T125	
	16A	125VAC		
	1/2HP	250VAC	T125	
	1/4HP	125VAC		

FEATURES

- Usage: General purpose, Heater, HVAC, Home Appliance, Massage Device
  用途：通用，電暖爐，空調設備，家電，按摩器
- Slim and miniature design with waterproof cap optional
  超薄微型設計，防水帽可選
- Single Pole
  單極
- Multi-function /Netaural lamp/Indicator function
  切合不同使用功能/指示燈功能
- Temperature Rating: -10°C~125°C
  額定溫度：-10℃~125℃
- Flammability Rating: UL94V-2 / Optional UL94V-0
  可燃性等級：UL94V-2 / 可選 UL94V-0

ORDER INFORMATION

A — L — T — 1 — BK — BK — 1 — 0 — 0 — 0 — 00 — ●●●●

FUNCTION
- A ON-OFF
- B ON-ON
- C ON-OFF-ON
- D (ON)-OFF
- E ON-(OFF)
- F ON-(ON)
- M ON-OFF-(ON)
- X (ON)-OFF-(ON)
- N ON-OFF w/lamp (Unswitched neutral)
- P ON-OFF w/lamp (Switched neutral)
- I Indicator

CURRENT
- L 16(4)A 250VAC
  - 10(3)A 250VAC 5E4
  - 16A 125VAC (Except function I)
- H 16(4)A 250VAC
  - 10(3)A 250VAC 5E4
  - 16A 125VAC
  - 1/2HP 250VAC
  - 1/4HP 125VAC (For A,B,N,P functions only)

TERMINAL TYPE

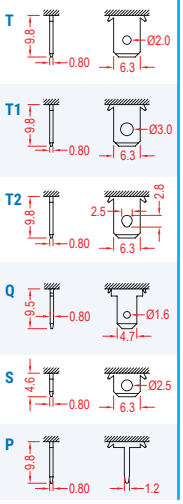

BASE TYPE

1

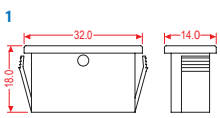

BASE COLOR
- BK Black
- WT White
- GE Grey
- RE Red
- GR Green
- BL Blue
- OR Amber
- YE Yellow

BUTTON COLOR
- BK Black
- WT White
- GE Grey
- RE Red
- GR Green
- BL Blue
- OR Amber
- YE Yellow

BUTTON TYPE
- 1 (For N&P functions only)
- 2 (For N&P functions only)
- 3 (Except function N&P)
- R (For N&P functions only)
- I (For I function only)

PRINTING
- 0 NONE
- 1
- 2
- 3
- 4
- 5
- 6
- 7
- 8 OFF ON
- 9 OFF ON
- A
- D
- H

COLOR OF PRINTING
- 0 None
- 1 White
- 2 Black
- 3 Red
- 4 Blue
- 5 Yellow

LAMP VOLTAGE
- 0 None
- 1 12V
- 3 110V
- 4 220V

SMALL LEN COLOR
- 00 None
- RE Red
- GR Green
- BL Blue
- OR Amber

INTERNAL USE ONLY

*For this option, please call factory for details

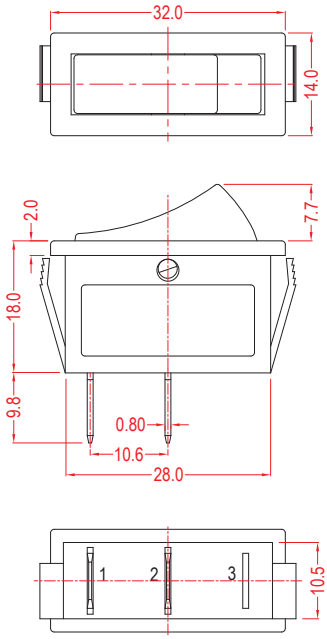

SUGGESTED PANEL HOLE SIZE

Panel thickness	x
0.75 ~ 1.25	30.3
1.25 ~ 2.0	30.5
2.0 ~ 3.0	30.7